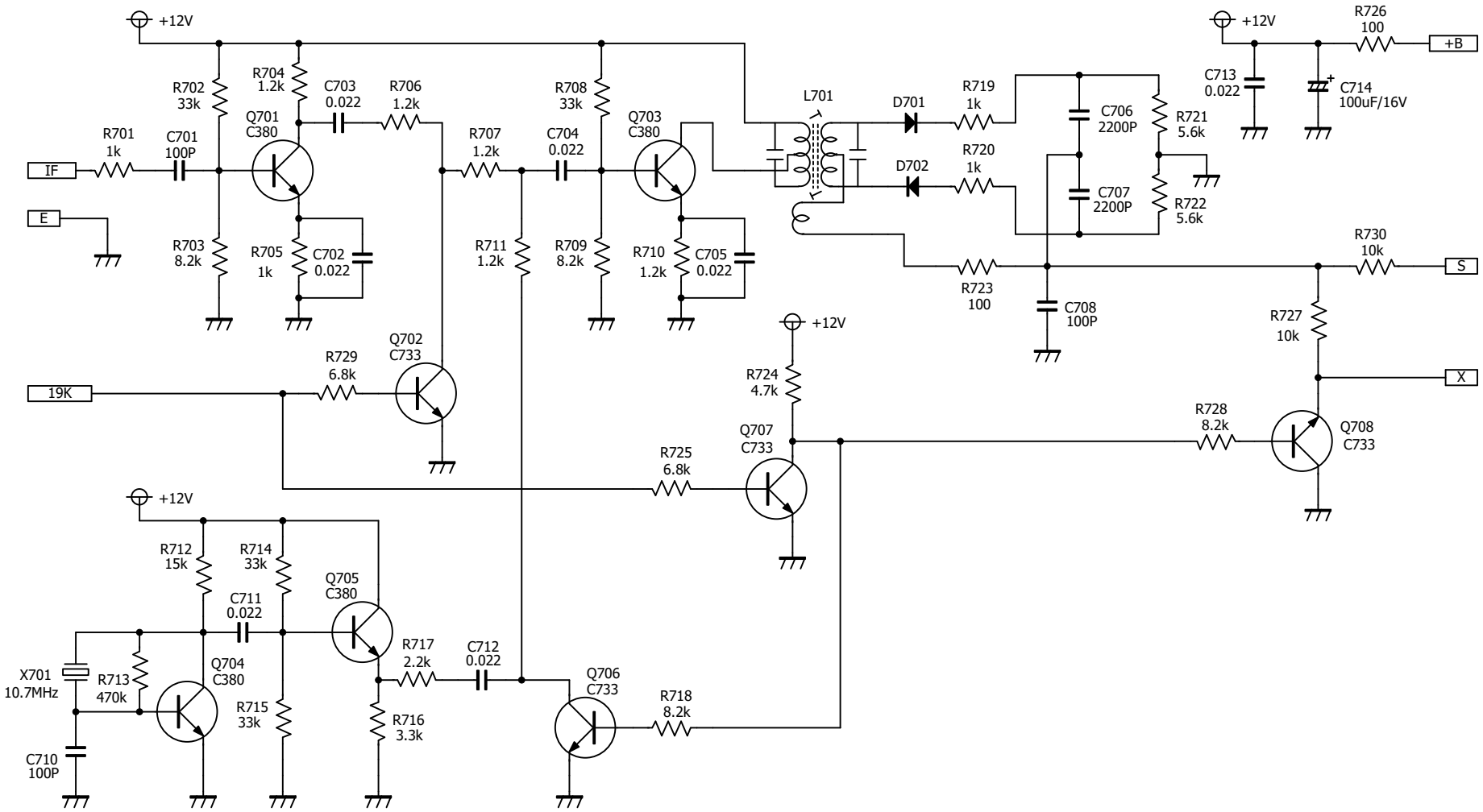


| | |
|---|---|
| ONKYO T-7 | |
| NCAFC-379 | Rev: |
| Date: 08-Nov-2015 | Hiroshi Kitaguchi |