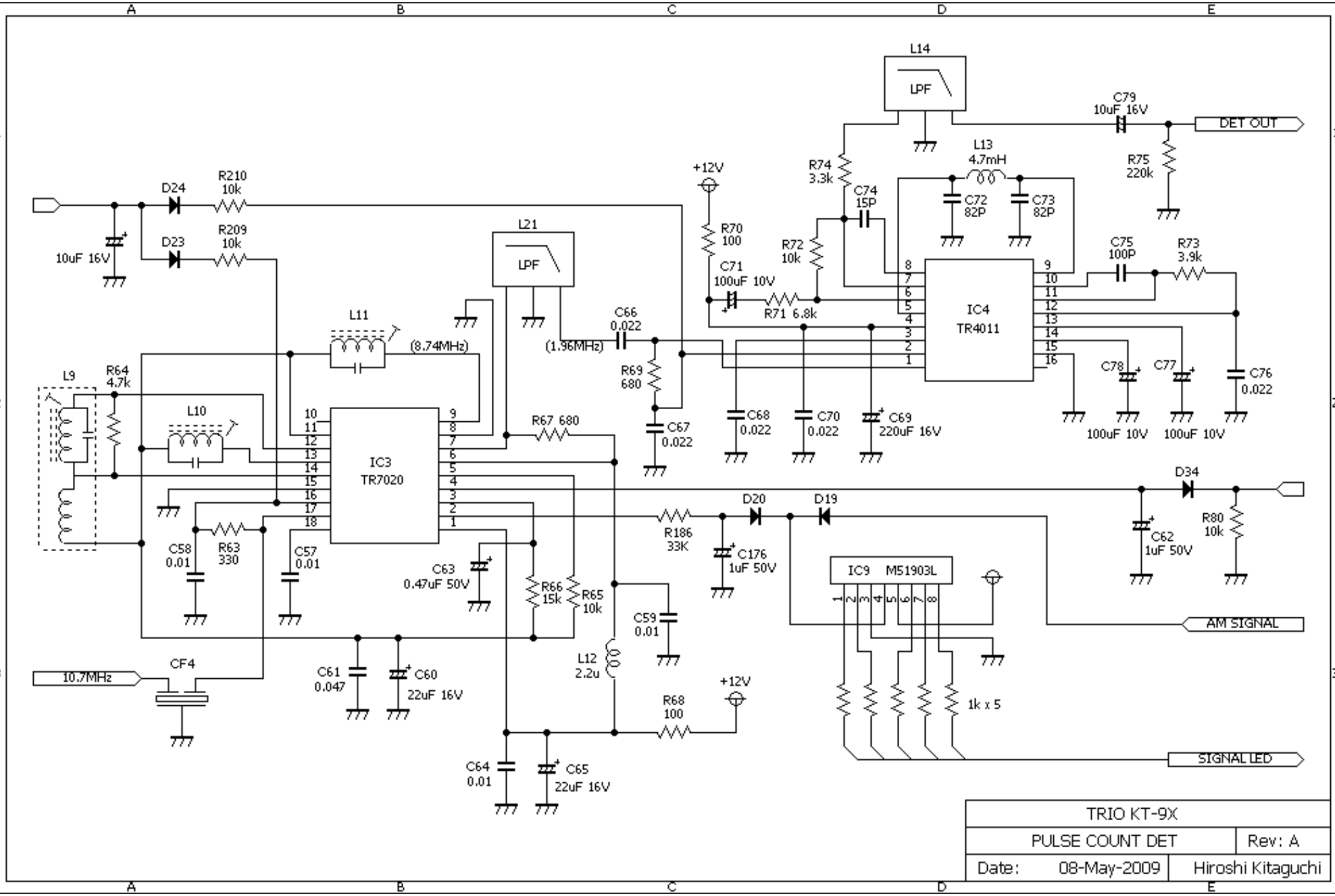
L14
LPF
C79
10uF 16V
DET OUT
R75
220k
L13
4.7mH
R74
3.3k
C74
15P
C72
82P
C73
82P
+12V
R70
100
R72
10k
C71
100uF 10V
R71 6.8k
IC4
TR4011
C75
100P
R73
3.9k
C78
100uF 10V
C77
100uF 10V
C76
0.022
L21
LPF
C66
0.022
(1.96MHz)
R69
680
C67
0.022
C68
0.022
C70
0.022
C69
220uF 16V
D24
R210
10k
D23
R209
10k
10uF 16V
L11
(8.74MHz)
L9
R64
4.7k
L10
IC3
TR7020
R67 680
D34
D20
D19
R186
33K
C176
1uF 50V
C62
1uF 50V
R80
10k
C58
0.01
R63
330
C57
0.01
C63
0.47uF 50V
R66
15k
R65
10k
C59
0.01
IC9 M51903L
AM SIGNAL
CF4
10.7MHz
C61
0.047
C60
22uF 16V
L12
2.2u
+12V
R68
100
1k x 5
C64
0.01
C65
22uF 16V
SIGNAL LED
TRIO KT-9X
PULSE COUNT DET
Rev: A
Date: 08-May-2009
Hiroshi Kitaguchi