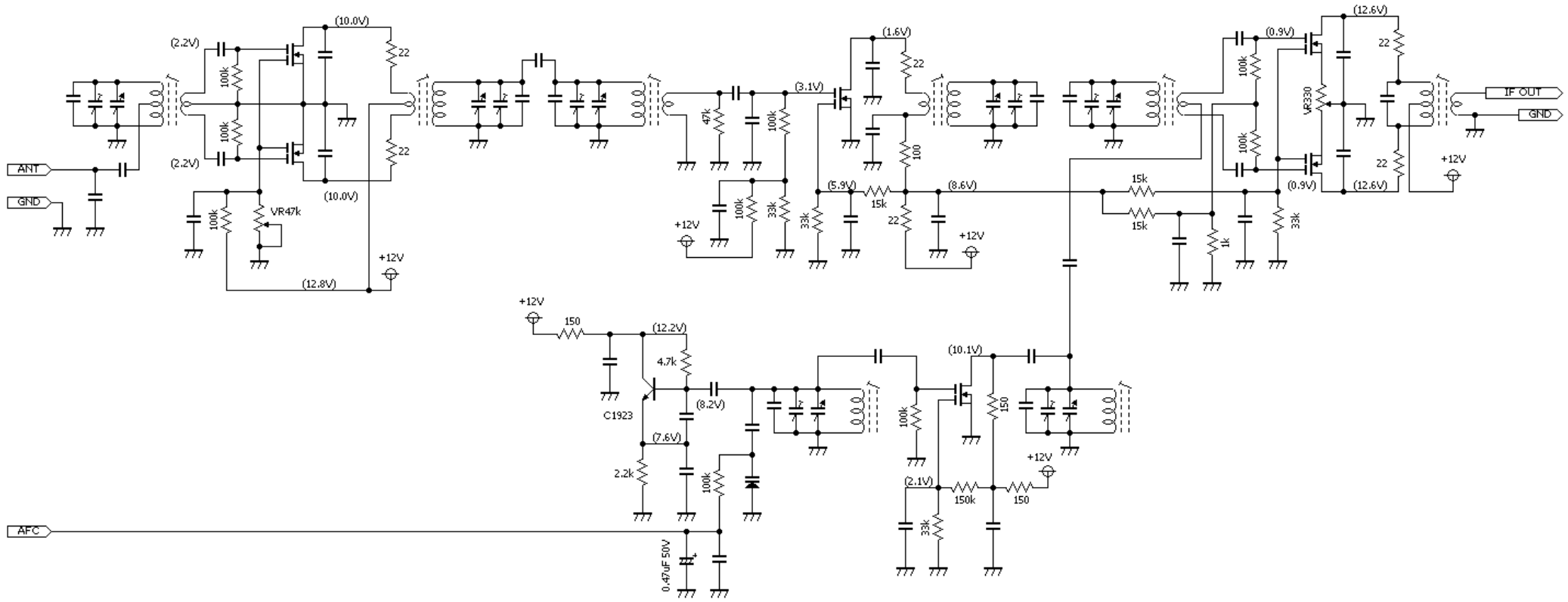

Pioneer F-700 FM FRONT END	
	Rev:
Date: 06-Jun-2009	Hiroshi Kitaguchi